| REVISIONS | | | |
|---|---|---|---|
| REV | DESCRIPTION | DATE | APPROVED |
| XX | XXXXXXXXXXXXXXXXXXXXXXXXXXXXXXXXXXXXXXXX | MO/DY/YR | XXX |

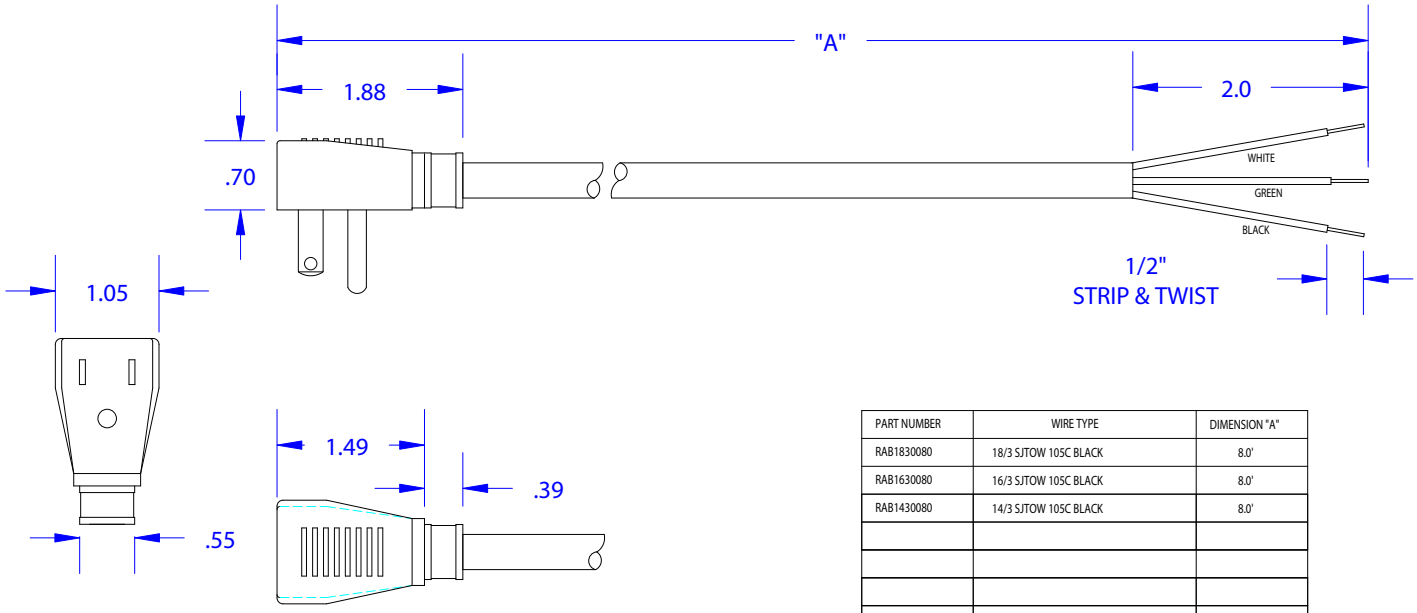


| PART NUMBER | WIRE TYPE | DIMENSION "A" |
|---|---|---|
| RAB1830080 | 18/3 SJTOW 105C BLACK | 8.0' |
| RAB1630080 | 16/3 SJTOW 105C BLACK | 8.0' |
| RAB1430080 | 14/3 SJTOW 105C BLACK | 8.0' |
| | | |
| | | |
| | | |
| | | |
| | | |

PROPRIETARY INFORMATION
KORD KING, INC.
ALL RIGHTS RESERVED

THIS DOCUMENT CONTAINS CONFIDENTIAL AND PROPRIETARY INFORMATION OF KORD KING AND IT'S RECEIPT OR POSSESSION DOES NOT CONVEY ANY RIGHTS TO REPRODUCE, DISCLOSE IT'S CONTENTS, OR TO MANUFACTURE, USE OR SELL ANYTHING IT MAY DESCRIBE. REPRODUCTION, DISCLOSURE, OR USE WITHOUT SPECIFIC WRITTEN AUTHORIZATION OF KORD KING IS STRICTLY FORBIDDEN.

TOLERANCES
FRACTIONAL ± 1/8
2 PLACE DEC. ± 0.060
3 PLACE DEC. ± 0.030

MATERIAL SPEC

# KORD KING, INC.

NEMA 5-15P
RIGHT ANGLE PLUG

| SIZE | FSCM NO. | DWG NO. | REV |
|---|---|---|---|
| A | | 5-15P-RA-8 | XX |

| SCALE | NONE | DRAWN BY: NICK<br>DATE DWN: 06/28/05 | SHEET | 1 OF 1 |
|---|---|---|---|---|