the photoelectric specialist

MINI-BEAM *Expert*™ Series

Microprocessor-based TEACH-mode photoelectric sensors

* U.S. Patent no. 5808296
** U.S. Patent no. 4356393

MINI-BEAM *Expert* Series Features

- TEACH-mode sensors in the popular MINI-BEAM package
- Easy push-button programming automatically adjusts sensitivity to optimal setting*
- Multiple sensing modes include: Polarized Retro, Clear Object Detection, Diffuse, Divergent, and Convergent, plus Glass and Plastic Fiber Optic models
- Fast, 500 microsecond (0.5 millisecond) output response
- Bipolar NPN (sinking) / PNP (sourcing) outputs
- Easy output programming eliminates the need for Light or Dark Operate selection
- Separate TEACH input allows remote programming by an external device, such as a switch or a process controller
- LED status indications for received signal strength (using Banner's patented AID™** function), power ON and output state
- Green Stability indicator flashes when received signal level approaches the switching threshold, also indicates Power ON
- Choose models with integral 2 m (6.5') cable or 5-pin Euro-style quick-disconnect (QD) connector; 9 m (30') cables are also available

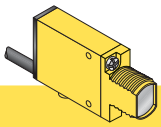

Excellent for sensing relatively small items where opposed-mode sensing is not possible. Recommended for relatively clean environments where high excess gain is not required. Filters out unwanted reflections.

Polarized, Visible red, 650 nm

MINI-BEAM *Expert* Series Polarized Retroreflective Mode Sensors

Models	Range*	Cable	Supply Voltage	Output Type	Excess Gain	Beam Pattern
Polarized						
SME312LP **SME312LPQD**	10 mm to 3 m (0.4" to 10')	5-wire 2 m (6.5') 5-Pin Euro-style QD	10-30V dc	Bipolar NPN/PNP	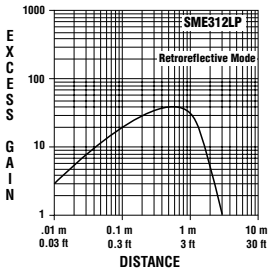	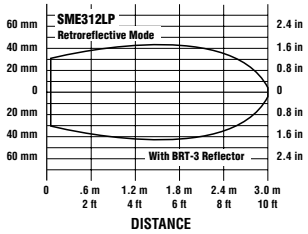

* Retroreflective range is specified using one model BRT-3 retroreflector (3" diameter). Actual sensing range may be more or less than specified, depending upon the efficiency and reflective area of the retroreflector(s) used. See page 12 and your current Banner Photoelectric Sensors catalog for more information.

WARNING . . . Not To Be Used for Personnel Protection

Never use these products as sensing devices for personnel protection. Doing so could lead to serious injury or death.

These sensors do NOT include the self-checking redundant circuitry necessary to allow their use in personnel safety applications. A sensor failure or malfunction can cause either an energized or de-energized sensor output condition. Consult your current Banner Safety Products catalog for safety products which meet OSHA, ANSI and IEC standards for personnel protection.

MINI-BEAM *Expert*™ Series

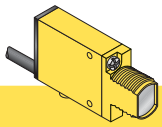

Reliably detects the presence of clear objects.

Visible red, 650 nm

MINI-BEAM *Expert* Series Polarized Retroreflective Clear Object Detection Sensors

Models	Range*	Cable	Supply Voltage	Output Type	Excess Gain	Beam Pattern
SME312LPC **SME312LPCQD** (Reflective tape is not recommended for use with these models)	1 m (3.3') with supplied reflector	5-wire 2 m (6.5') 5-Pin Euro-style QD	10-30V dc	Bipolar NPN/PNP	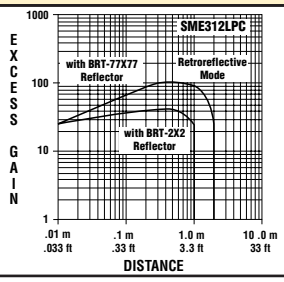	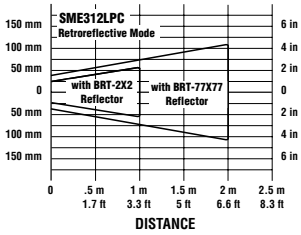

* Sensing range will vary, according to the efficiency and reflective area of the retroreflector(s) used. See page 12 and your current Banner Photoelectric Sensors catalog for more information.

D Models

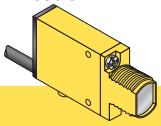

W Models

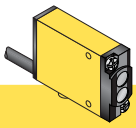

These economical single-unit sensors are excellent for sensing objects of adequate size and reflectivity at short range. Divergent models are useful for sensing small items and translucent or transparent materials at close range.The SME312DV sensors effectively sense specular surfaces like smi-conductor wafers, disk drive media, glass and machined surfaces. The collimated optics of the SME312DV also permits the sensor to be mounted against clear container walls, view ports and other types of optical "feed-throughs."

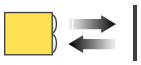

Infrared, 880 nm
Visible Red, 650 nm

MINI-BEAM *Expert* Series Diffuse Mode Sensors

Models	Range	Cable	Supply Voltage	Output Type	Excess Gain	Beam Pattern
					Performance based on 90% reflectance white test card	
Diffuse Infrared, 880 nm						
SME312D **SME312DQD**	380 mm (15")	5-wire 2 m (6.5') 5-Pin Euro-style QD	10-30V dc	Bipolar NPN/PNP	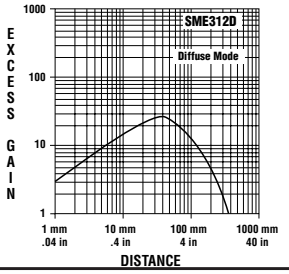	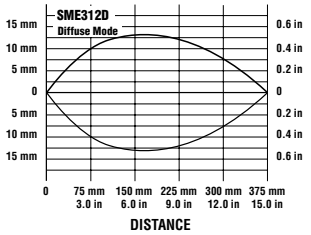
Diffuse Visible Red, 650 nm						
SME312DV **SME312DVQD**	1100 mm (43")	5-wire 2 m (6.5') 5-Pin Euro-style QD	10-30V dc	Bipolar NPN/PNP	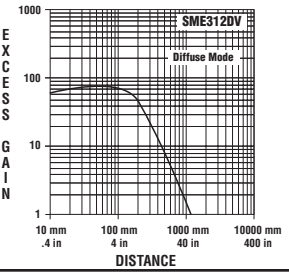	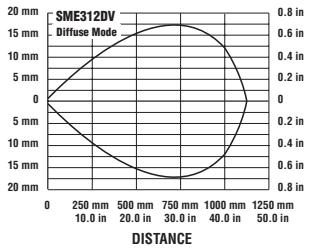
Divergent Diffuse Infrared, 880 nm						
SME312W **SME312WQD**	130 mm (5")	5-wire 2 m (6.5') 5-Pin Euro-style QD	10-30V dc	Bipolar NPN/PNP	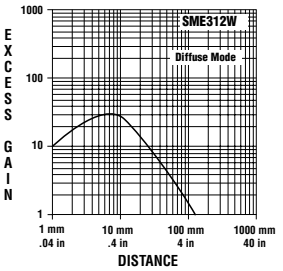	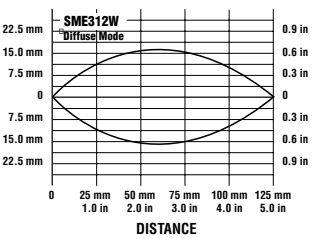

Banner Engineering Corp. • Minneapolis, U.S.A.
Website: http://www.baneng.com • Tel: 763.373.6767

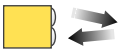

Visible red, 650 nm
Visible green, 525 nm
Visible blue, 475 nm
Visible white, 450-650 nm

Convergent-mode sensors are a good choice for counting adjacent radiused objects and for accurate position sensing. Blue, green and white beam models are recommended for color mark sensing.

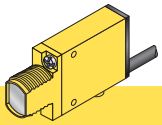

MINI-BEAM *Expert* Series Convergent Mode Sensors

Models	Focus	Cable	Supply Voltage	Output Type	Excess Gain	Beam Pattern
					Performance based on 90% reflectance white test card	
Visible Red, 650 nm						
SME312CV **SME312CVQD**	16 mm (0.65") **Spot Size at Focus:** 1.3 mm (0.05")	5-wire 2 m (6.5') 5-Pin Euro-style QD	10-30V dc	Bipolar NPN/PNP	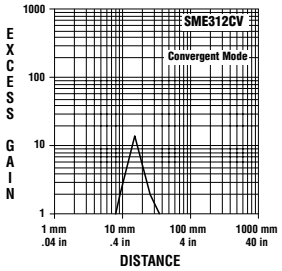	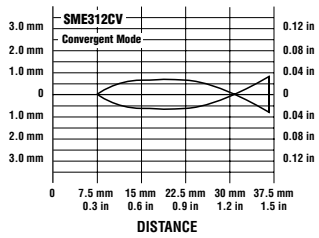
SME312CV2 **SME312CV2QD**	43 mm (1.7") **Spot Size at Focus:** 3.0 mm (0.12")	5-wire 2 m (6.5') 5-Pin Euro-style QD	10-30V dc	Bipolar NPN/PNP	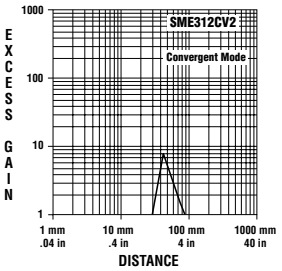	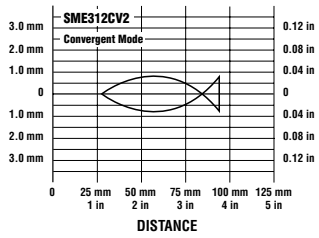
Visible Green, 525 nm						
SME312CVG **SME312CVGQD**	16 mm (0.65") **Spot Size at Focus:** 1.0 mm (0.04")	5-wire 2 m (6.5') 5-Pin Euro-style QD	10-30V dc	Bipolar NPN/PNP	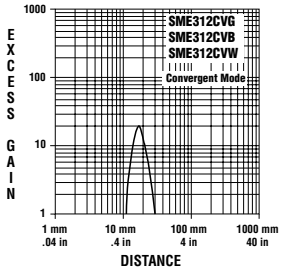	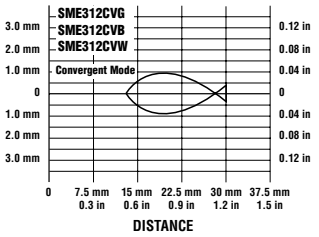
Visible Blue, 475 nm						
SME312CVB **SME312CVBQD**	16 mm (0.65") **Spot Size at Focus:** 1.8 mm (0.07")	5-wire 2 m (6.5') 5-Pin Euro-style QD	10-30V dc	Bipolar NPN/PNP		
Visible White, 450-650 nm						
SME312CVW **SME312CVWQD**	16 mm (0.65") **Spot Size at Focus:** 1.8 mm (0.07")	5-wire 2 m (6.5') 5-Pin Euro-style QD	10-30V dc	Bipolar NPN/PNP		

NOTES: i) 9 m (30') cables are available by adding suffix **"W/30"** to the model number of any cabled sensor (e.g., **SME312D W/30**)
ii) A model with a QD connector requires a mating cable (see page 13).

MINI-BEAM *Expert*™ Series

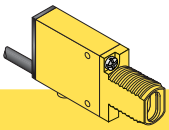

An excellent option for sensing in tight or otherwise inaccessible areas. Fibers withstand vibration and shock; are immune to electrical noise. Glass fibers withstand high temperatures, extreme moisture and corrosive materials. Not recommended for applications requiring bending or repeated flexing of fibers (see plastic fiber models).

Infrared, 880 nm
Visible red, 650 nm

MINI-BEAM *Expert* Series Glass Fiber Optic Sensors

Models	Range	Cable	Supply Voltage	Output Type	Excess Gain	Beam Pattern
					Diffuse mode performance based on 90% reflectance white test card	
Infrared, 880 nm					OPPOSED MODE – INDIVIDUAL FIBERS	
SME312F **SME312FQD**	Range varies by sensing mode and fiber optics used	5-wire 2 m (6.5') 5-Pin Euro-style QD	10-30V dc	Bipolar NPN/PNP	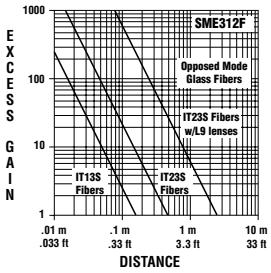	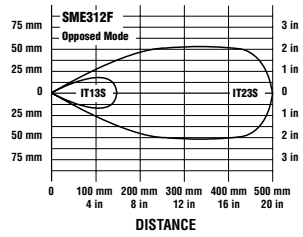
					DIFFUSE MODE – BIFURCATED FIBERS	
					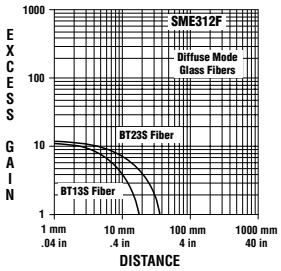	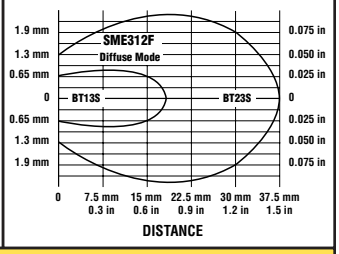
Visible Red, 650 nm					OPPOSED MODE – INDIVIDUAL FIBERS	
SME312FV **SME312FVQD**	Range varies by sensing mode and fiber optics used	5-wire 2 m (6.5') 5-Pin Euro-style QD	10-30V dc	Bipolar NPN/PNP	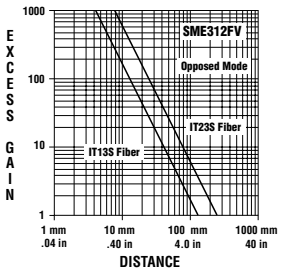	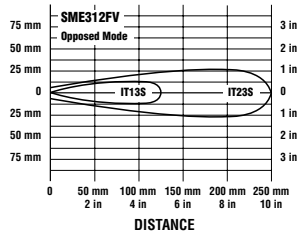
					DIFFUSE MODE – BIFURCATED FIBERS	
					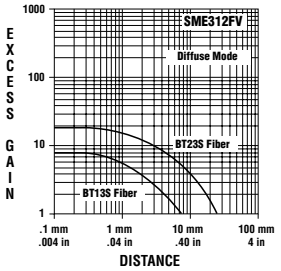	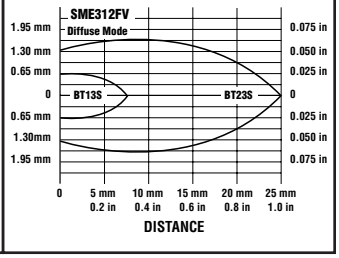

Banner Engineering Corp. • Minneapolis, U.S.A.
Website: http://www.baneng.com • Tel: 763.373.6767

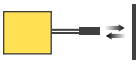

Visible green, 525 nm
Visible blue, 475 nm
Visible white, 450-650 nm

Recommended for color mark sensing.

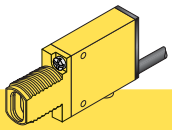

MINI-BEAM *Expert* Series Glass Fiber Optic Sensors

Models	Range	Cable	Supply Voltage	Output Type	Excess Gain	Beam Pattern
					Diffuse mode performance based on 90% reflectance white test card	
Visible Green, 525 nm					DIFFUSE MODE – BIFURCATED FIBERS	
SME312FVG **SME312FVGQD**	Range varies by sensing mode and fiber optics used	5-wire 2 m (6.5') 5-Pin Euro-style QD	10-30V dc	Bipolar NPN/PNP	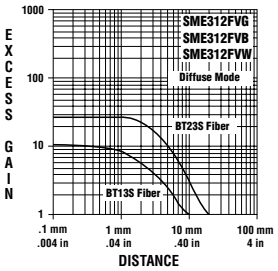	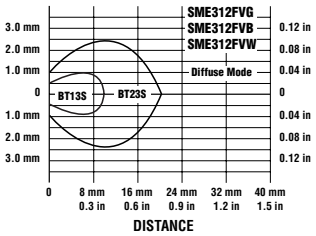
Visible Blue, 475 nm						
SME312FVB **SME312FVBQD**	Range varies by sensing mode and fiber optics used	5-wire 2 m (6.5') 5-Pin Euro-style QD	10-30V dc	Bipolar NPN/PNP		
Visible White, 450-650 nm						
SME312FVW **SME312FVWQD**	Range varies by sensing mode and fiber optics used	5-wire 2 m (6.5') 5-Pin Euro-style QD	10-30V dc	Bipolar NPN/PNP		

NOTES: i) 9 m (30') cables are available by adding suffix **"W/30"** to the model number of any cabled sensor (e.g., **SME312FVG W/30**)
ii) A model with a QD connector requires a mating cable (see page 13).

MINI-BEAM *Expert*™ Series

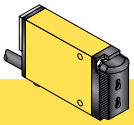

An excellent option for sensing in tight or otherwise inaccessible areas. Fibers withstand vibration and shock; are immune to electrical noise. Plastic fibers function well at temperatures from -30º to +70ºC (-20ºF to +158ºF), and stand up to repeated flexing. Most are easy to shorten in the field, for custom installations. Not recommended for severe environments (see glass fiber models). Visible green,blue and white beam models are recommended for color mark sensing.

Visible red, 650 nm
Visible green, 525 nm
Visible blue, 475 nm
Visible white, 450-650 nm

MINI-BEAM *Expert* Series Plastic Fiber Optic Sensors

Models	Range	Cable	Supply Voltage	Output Type
Visible Red, 650 nm				
SME312FP **SME312FPQD**	Range varies by sensing mode and fiber optics used	5-wire 2 m (6.5') 5-Pin Euro-style QD	10-30V dc	Bipolar NPN/PNP
Visible Green, 525 nm				
SME312FPG **SME312FPGQD**	Range varies by sensing mode and fiber optics used	5-wire 2 m (6.5') 5-Pin Euro-style QD	10-30V dc	Bipolar NPN/PNP
Visible Blue, 475 nm				
SME312FPB **SME312FPBQD**	Range varies by sensing mode and fiber optics used	5-wire 2 m (6.5') 5-Pin Euro-style QD	10-30V dc	Bipolar NPN/PNP
Visible White, 450-650 nm				
SME312FPW **SME312FPWQD**	Range varies by sensing mode and fiber optics used	5-wire 2 m (6.5') 5-Pin Euro-style QD	10-30V dc	Bipolar NPN/PNP

Excess Gain / **Beam Pattern**

Diffuse mode performance based on 90% reflectance white test card

OPPOSED MODE – INDIVIDUAL FIBERS

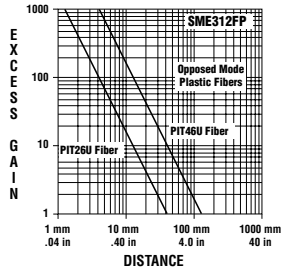

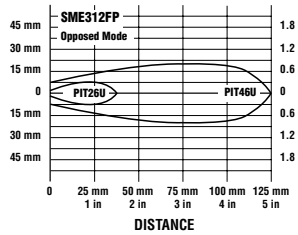

DIFFUSE MODE – BIFURCATED FIBERS

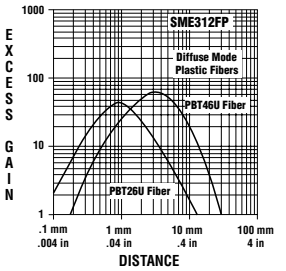

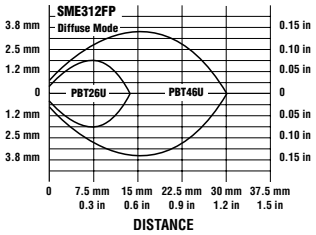

DIFFUSE MODE – BIFURCATED FIBERS

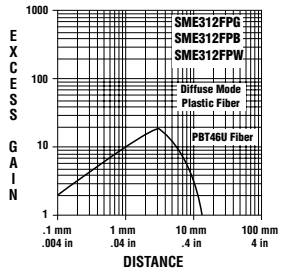

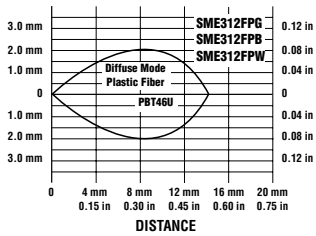

NOTES: i) 9 m (30') cables are available by adding suffix **"W/30"** to the model number of any cabled sensor (e.g., **SME312FPB W/30**)
ii) A model with a QD connector requires a mating cable (see page 13).

Banner Engineering Corp. • Minneapolis, U.S.A.
Website: http://www.baneng.com • Tel: 763.373.6767

MINI-BEAM *Expert* Series Specifications

Supply Voltage and Current	10 to 30V dc (10% maximum ripple) at less than 45 mA, exclusive of load
Supply Protection Circuitry	Protected against reverse polarity and transient voltages
Output Configuration	Bipolar: One current sourcing (PNP) and one current sinking (NPN) open-collector transistor
Output Rating	150 mA maximum each output at 25°C, derated to 100 mA at 70°C (derate ≈1 mA per °C) **Off-state leakage current:** less than 5µA @ 30V dc **ON-state saturation current:** less than 1V @ 10 mA; less than 1.5V @ 150 mA
Output Protection Circuitry	Protected against false pulse on power-up and continuous overload or short-circuit of outputs
Output Response Time	Sensors will respond to either a "light" or a "dark" signal of 500 microseconds or longer duration, 1 kHz max. NOTE: 1 second delay on power-up; outputs do not conduct during this time.
Repeatability	100 microseconds (all models)
Adjustments	Push-button TEACH mode sensitivity setting (see TEACH mode, page 8); remote TEACH mode input is provided (gray wire)
Indicators	Two LEDs: Yellow and Bi-color Green/Red **Green (RUN Mode):** ON when power is applied Flashes when received light level approaches the switching threshold **Red (TEACH Mode):** OFF when no signal is received. Pulses to indicate signal strength (received light level). Rate is proportional to signal strength (the stronger the signal, the faster the pulse rate). This is a function of Banner's patented Alignment Indicating Device (AID™, US patent 4356393). **Yellow (TEACH Mode):** ON to indicate sensor is ready to learn output ON condition OFF to indicate sensor is ready to learn output OFF condition **Yellow (RUN Mode):** ON when outputs are conducting
Construction	Reinforced thermoplastic polyester housing, totally encapsulated, o-ring seal, acrylic lenses, and stainless steel screws.
Environmental Rating	Meets NEMA standards 1, 2, 3, 3S, 4, 4X, 6, 12, and 13; IEC IP67
Connections	PVC-jacketed 5-conductor 2 m (6.5') or 9 m (30') unterminated cable, or 5-pin Euro-style quick-disconnect (QD) fitting are available. QD cables are ordered separately; see page 13.
Operating Conditions	**Temperature:** -20° to +70°C (-4° to +158°F) **Maximum relative humidity:** 90% at 50°C (non-condensing)
Application Notes	The first condition presented during TEACH mode becomes the output ON condition.
Certifications	CE c UL US

Using the MINI-BEAM *Expert*

RUN Mode

Normal operation of the MINI-BEAM *Expert* is called RUN mode. The two LED indicators (bi-color Green/Red and Yellow) operate as follows in RUN Mode:

Green (RUN Mode): ON steady whenever power is applied
Flashes as received light level approaches the switching threshold (stability indicator). (The stability indicator signals when maintenance, realignment, or reprogramming is needed during RUN mode.)

Yellow (Output): ON when the outputs are energized (conducting)
OFF when the outputs are de-energized (not conducting)

If contrast is marginal, the bi-color indicator will flash green (to indicate instability). Reprogramming or realigning the sensor, or cleaning the sensor or fiber lenses may solve a problem with stability.

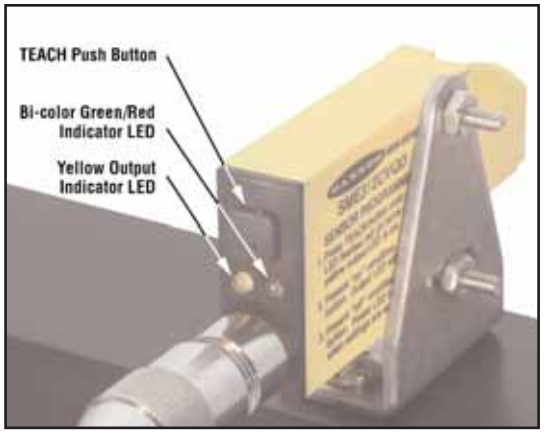

Figure 1. MINI-BEAM *Expert* Series indicators

TEACH Mode

Programming of the MINI-BEAM *Expert* – setting the sensitivity and selecting output ON and OFF conditions – is performed in TEACH mode.

Determining the Output ON and OFF Conditions
The two sensing conditions may be presented in either order. The condition presented first is the condition for which the output will energize (the "Output ON" target).

Setting Sensitivity
Sensitivity is automatically set (and optimized) when teaching the sensor the ON and OFF conditions. When the push button is clicked, the sensor samples each sensing condition and registers it into memory. After the second sensing condition is registered, the MINI-BEAM *Expert* automatically sets the sensitivity to the optimum value for the application, and then returns to RUN mode.

The two LED indicators (bi-color Green/Red and Yellow) operate as follows in TEACH Mode:

Red (TEACH Mode): Lights when the sensor "sees" its modulated light source; pulse rate is proportional to the received light signal strength during TEACH programming

Yellow (Output): ON to indicate TEACH output ON condition
OFF to indicate TEACH output OFF condition

The Signal Strength indicator is Banner's exclusive AID™ (Alignment Indicating Device). Its pulse rate increases as the received light signal strength increases (during programming). This feature simplifies accurate alignment during TEACH mode, and gives a relative indication of sensing contrast between the light and dark conditions.

Push Button		Resulting Indicator Status
Press and hold until the bi-color (green/red) indicator begins to flash red, or turns OFF.	**Push and Hold ≥ 2 Seconds** 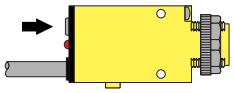	**Yellow:** ON **Red:** Pulses to indicate relative received signal strength.
TEACH Condition #1 (Output ON state) Present the first sensing condition to the sensor and single-click.†	**Single-Click** 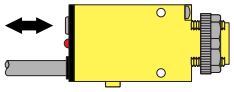 **Sensing Condition #1 (Output ON State)**	**Yellow:** OFF **Red:** Pulses to indicate relative received signal strength.
TEACH Condition #2 (Output OFF state) Present the second sensing condition to the sensor and single-click.	**Single-Click** 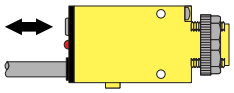 **Sensing Condition #2 (Output OFF State)**	If contrast is acceptable, the sensor returns to RUN mode, otherwise it will return to TEACH Condition #1. **Green:** ON (or flashes if signal is close to the switching threshold). **Yellow:** OFF, until the sensing condition changes.

†NOTE: The sensor will return to RUN mode if the first TEACH condition is not registered within 90 seconds. TEACH mode may be cancelled before either condition #1 or #2 by holding the push button depressed for ≥ 2 seconds.

A Note About the "Clicks": Clicks are meant to be pressed firmly, then quickly released. Indicators go ON or OFF after a brief delay; do not wait until LEDs change status before releasing push button. (If push button is pressed for 2 seconds or longer, sensor will automatically return to RUN mode.)

Remote Programming

The gray wire of the MINI-BEAM *Expert* may be connected to a remote switch or process controller to disable or enable the push button or to program the sensor through TEACH mode.

A remote programming switch is connected between the gray wire and dc common (see hookup diagrams on page 11). The switch may be either a normally-open contact, or an open-collector NPN transistor with its emitter connected to dc common.

Programming is accomplished using a specified sequence of input pulses. The duration of each pulse is defined as: 0.04 seconds < T < 0.8 seconds.

The required spacing between adjacent pulses in a sequence (a "four-pulse") is also: 0.04 < T < 0.8 seconds. The timing diagrams (Figure 2, left) illustrate the input requirements.

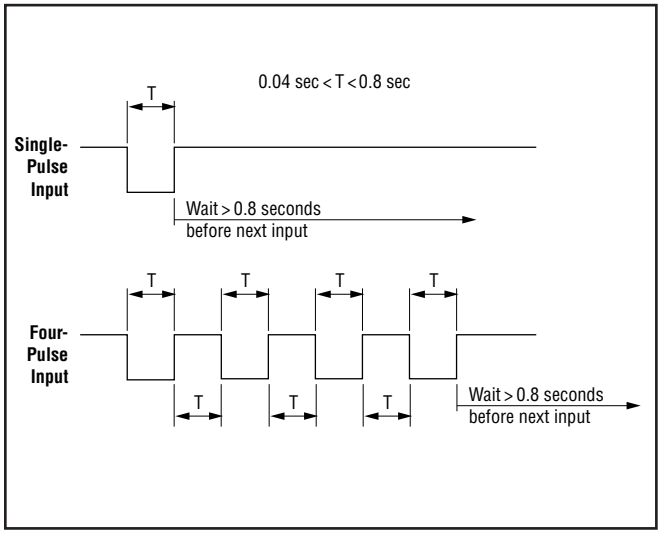

Figure 2. Timing programs for remote programming

TEACH-Mode Programming Using the Remote TEACH Line

NOTE: Pulse the TEACH line by momentarily connecting the remote wire to dc common (no press-and-hold procedure is required to enter TEACH mode). This is the equivalent of a "click" when using the sensor TEACH push button.

1. Position the "Output ON" condition and pulse the Remote TEACH line once. The bi-color (green/red) indicator begins to flash red or turn OFF (the AID function is indicating signal strength) and the yellow Output indicator will flash briefly and then go OFF.

2. Position the "Output OFF" condition and pulse the Remote TEACH line again. The green indicator will turn ON and the sensor will return to RUN mode with the new settings, if the contrast is adequate. If the contrast is not adequate, the yellow indicator will turn ON and the red AID indicator will remain active, indicating that the sensor is waiting for the first TEACH condition to be retaught. (RUN mode begins a few seconds after the end of TEACH mode.)

NOTE: To exit TEACH mode without updating, hold the Remote TEACH line low (longer than 2 seconds) until the green indicator goes ON, *before teaching the second target.*

Locking Out (Disabling) the Push Button

When remote programming is used exclusively, it may be beneficial to disable the push button on the MINI-BEAM *Expert* to increase the security of the settings. The push button can be enabled and/or disabled via the remote line only. If the push button is disabled, TEACH mode cannot be accessed from the push button.

Pulse the Remote TEACH line 4 times (four-pulse) to enable or disable the push button (see timing diagram, Figure 2).

Troubleshooting

The MINI-BEAM *Expert's* Power LED may begin to alternate flashing red/green; this indicates a microprocessor memory error. If it occurs, try reteaching the sensor, or try cycling power ON and OFF, then reteaching the sensor. If this does not solve the problem, or if it occurs frequently, replace the sensor.

MINI-BEAM *Expert* Dimensions

MINI-BEAM Expert Series Sensor
(models with suffix LP, LPC, D, CV, CV2, CVG, CVB and CVW)

Cabled Models

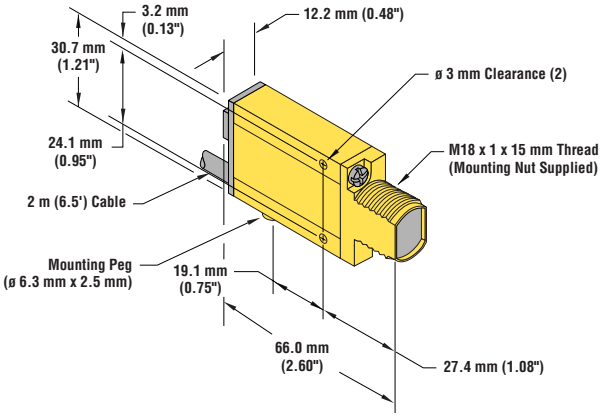

Quick-Disconnect Models

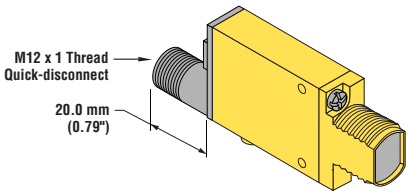

MINI-BEAM Expert Series Sensor Divergent Diffuse Mode (models with suffix W)

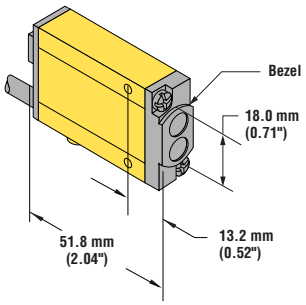

MINI-BEAM Expert Series Sensor Glass Fiber Optic (models with suffix F, FV, FVG, FVB and FVW)

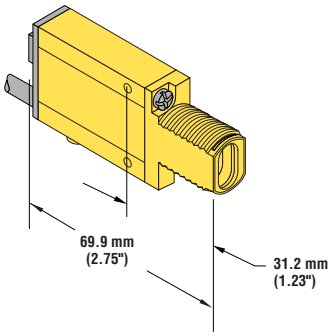

MINI-BEAM Expert Series Sensor Plastic Fiber Optic (models with suffix FP, FPG, FPB and FPW)

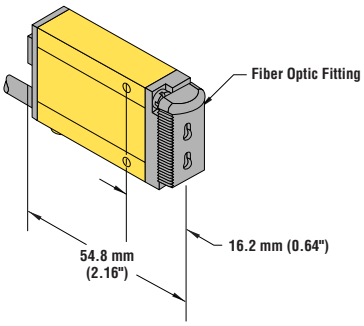

MINI-BEAM *Expert* Hookups

MINI-BEAM Expert Series Sensor (Cabled models)

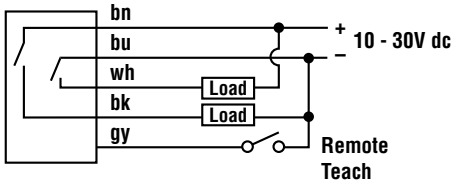

MINI-BEAM Expert Series Sensor (Quick-disconnect models)

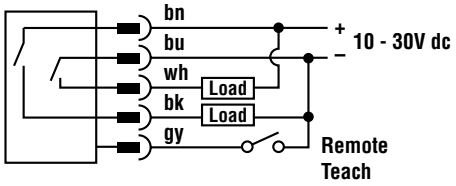

Accessories

Retroreflective Targets

Banner offers a wide selection of high-quality retroreflective targets. See your current Banner Photoelectric Sensors catalog for complete information on available models.

Polarized sensors require corner cube type retroreflective targets only. Sensing range will vary, according to the efficiency and reflective area of the retroreflector(s) used. For these low-contrast applications, the model BRT-2X2 (2" x 2") reflector is recommended, and one is bundled with each SME312LPC(QD) sensor.

- For applications that involve high levels of vibration, the model BRT-36x40BM, with its micro-prism geometry, is recommended.
- For long-range applications, the BRT-77X77C reflector provides a range up to 2 m (6.5').
- SME312LPC(QD) are for use with corner cube type reflectors only; reflective tape is not recommended.
- For clear object detection (low-contrast applications), the model BRT-2x2 reflector is recommended.

Before installling retroreflective tape, clean the surface with an isopropyl alcohol wipe.

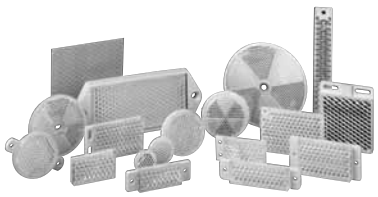

BRT-2X2* (One is supplied with each SME312LPC(QD) sensor)	Reflectivity Factor	Maximum Temperature
	1.0	50°C (120°F)

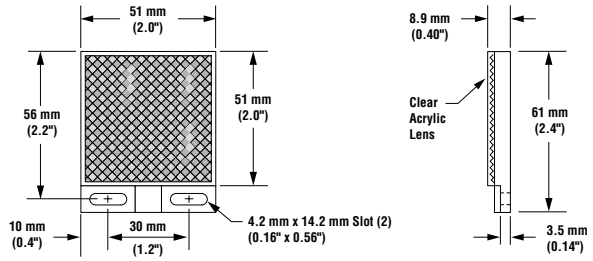

BRT-36X40BM* (This target has micro-prism geometry)	Reflectivity Factor	Maximum Temperature
	1.2	50°C (120°F)

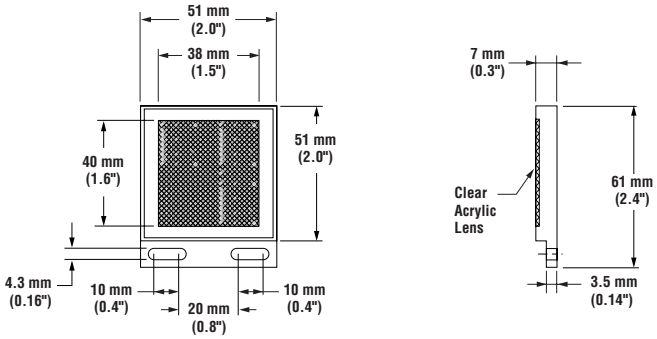

BRT-77X77C*	Reflectivity Factor	Maximum Temperature
	2.0	50°C (120°F)

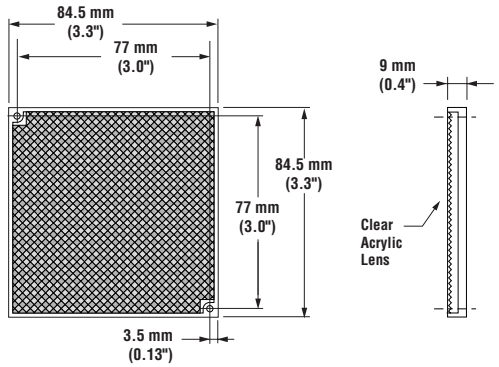

BRT-TVHG	Reflectivity Factor	Maximum Temperature
	0.8	60°C (140°F)

Retroreflective tape is available in a variety of sizes and shapes; see your Banner Photoelectric Catalog for more information.

* Optional brackets are available. See the Accessories section of your current Banner Photoelectric Sensors catalog.

Quick-Disconnect Cables

The following cables are available for MINI-BEAM *Expert* Series QD models

Style	Model	Length	Dimensions	Pin-out
5-pin Euro-style straight	**MQDC1-506** **MQDC1-515** **MQDC1-530**	2 m (6.5') 5 m (15') 9 m (30')	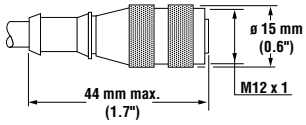	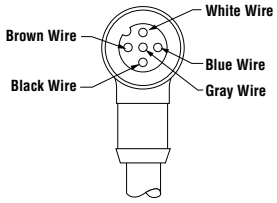
5-pin Euro-style right-angle	**MQDC1-506RA** **MQDC1-515RA** **MQDC1-530RA**	2 m (6.5') 5 m (15') 9 m (30')	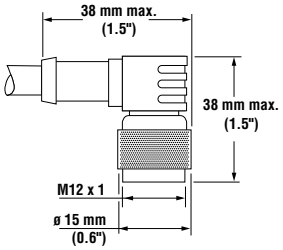	

MINI-BEAM Mounting Brackets

SMB312S

- Stainless steel 2-axis, side mounting bracket

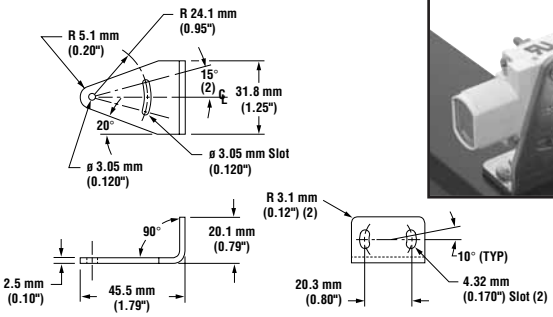

SMB312B

- Stainless steel 2-axis, bottom mounting bracket
- Includes mounting foot

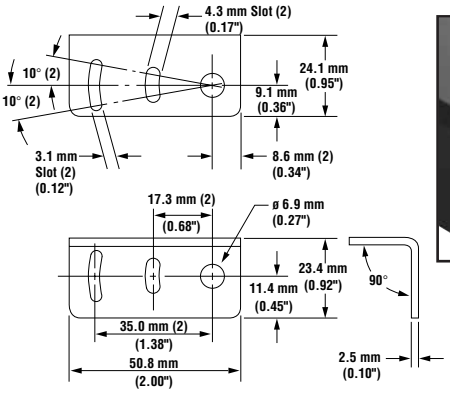

SMB312PD

- Stainless steel 18 mm barrel mounting bracket

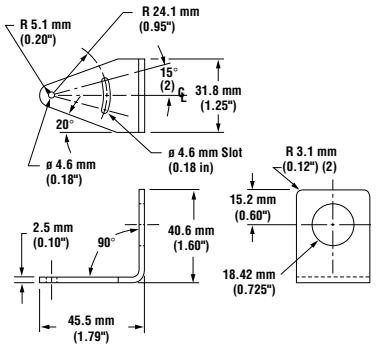

SMB46L

- "L" bracket
- 14 ga 316 stainless steel

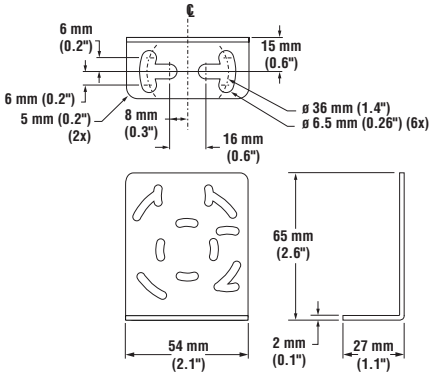

MINI-BEAM Mounting Brackets

SMB46S

- "S" bracket
- 14 ga 316 stainless steel

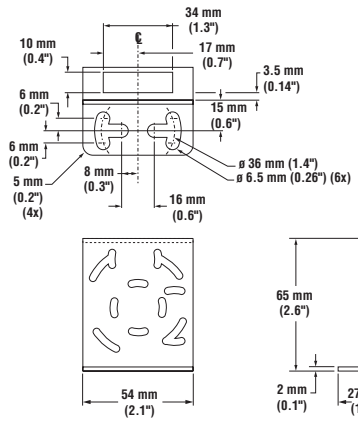

SMB46U

- "U" bracket
- 14 ga 316 stainless steel

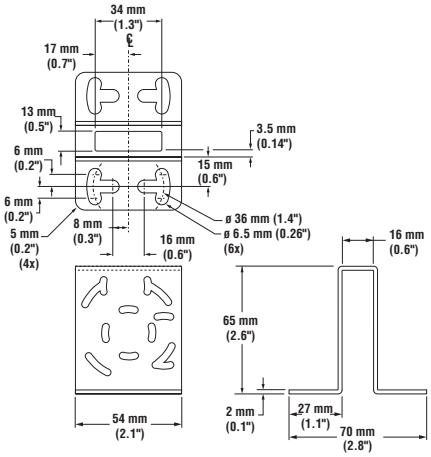

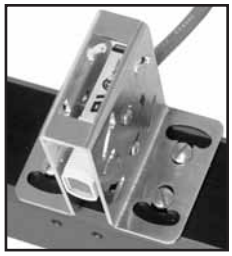

SMB18C

- 18 mm split clamp black reinforced thermoplastic polyester bracket
- Stainless steel mounting hardware included

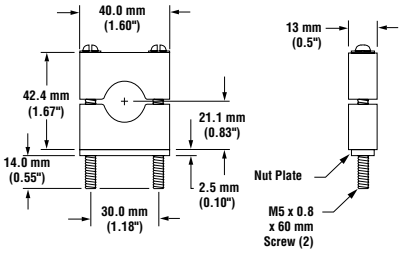

SMB18SF

- 18 mm swivel, black reinforced thermoplastic polyester bracket
- Stainless steel mounting hardware included

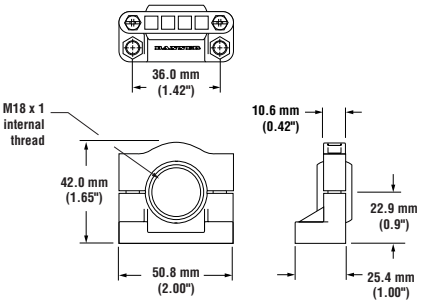

SMB3018SC

- 18 mm swivel; barrel- or side-mount
- Black thermoplastic polyester

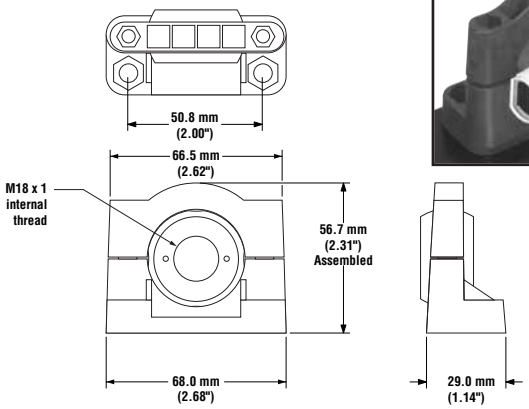

SMB3018SUS

- Side-mount swivel – extended range of motion
- Black thermoplastic polyester

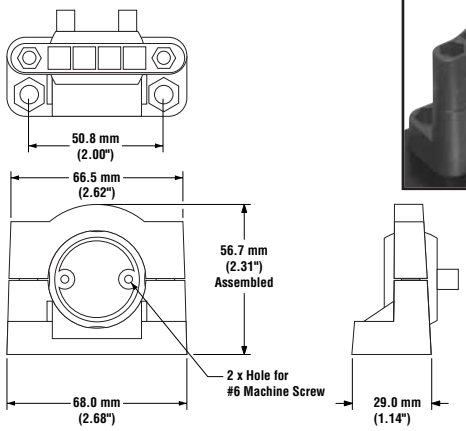

Banner Engineering Corp. • Minneapolis, U.S.A.
Website: http://www.baneng.com • Tel: 763.373.6767

MINI-BEAM Mounting Brackets

SMB30SK	• Flat-mount swivel bracket with extended range of motion • Black reinforced thermoplastic polyester and 316 stainless steel	**SMB18UR**	• Universal rotating bracket, 18 mm or 30 mm • 300 series stainless steel

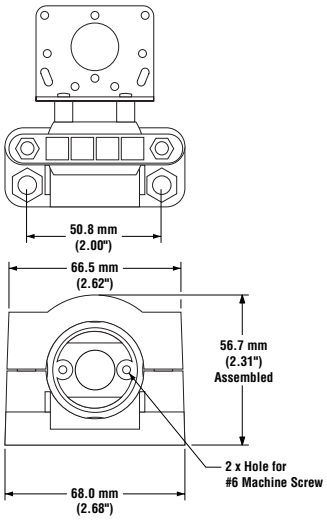

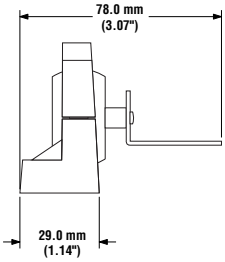

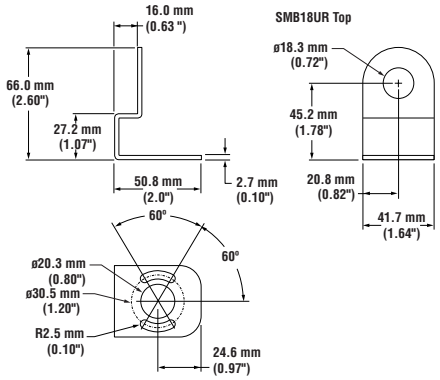

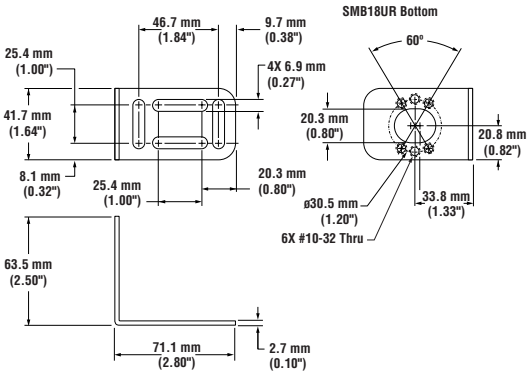

the photoelectric specialist

WARRANTY: Banner Engineering Corp. warrants its products to be free from defects for one year. Banner Engineering Corp. will repair or replace, free of charge, any product of its manufacture found to be defective at the time it is returned to the factory during the warranty period. This warranty does not cover damage or liability for the improper application of Banner products. This warranty is in lieu of any other warranty either expressed or implied.

Banner Engineering Corp., 9714 Tenth Ave. No., Minneapolis, MN 55441 • Phone: 763.544.3164 • www.bannerengineering.com • Email: sensors@baneng.com